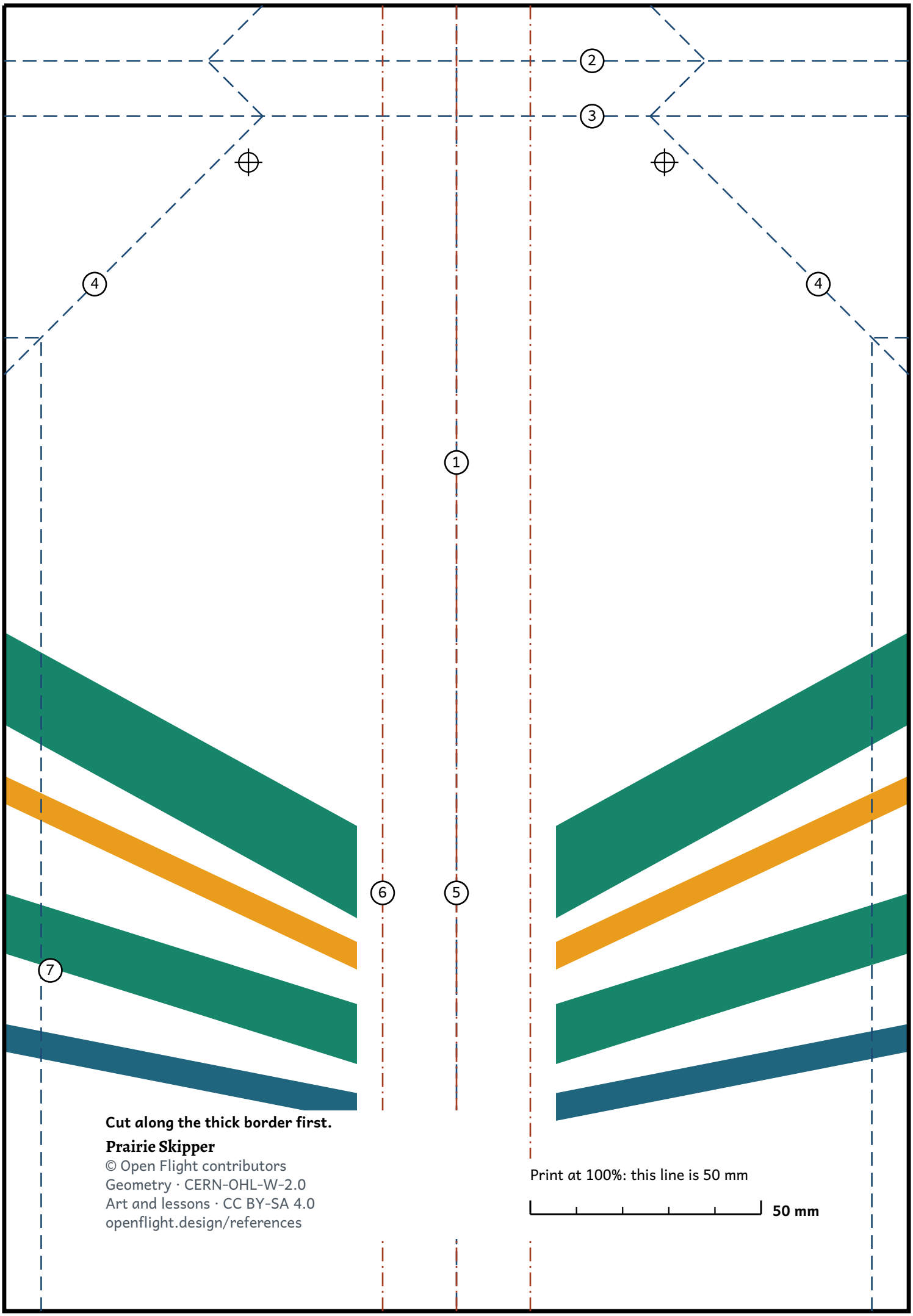

Cut along the thick border first.

Prairie Skipper

© Open Flight contributors
Geometry · CERN-OHL-W-2.0
Art and lessons · CC BY-SA 4.0

openflight.design/references

Print at 100%: this line is 50 mm

50 mm

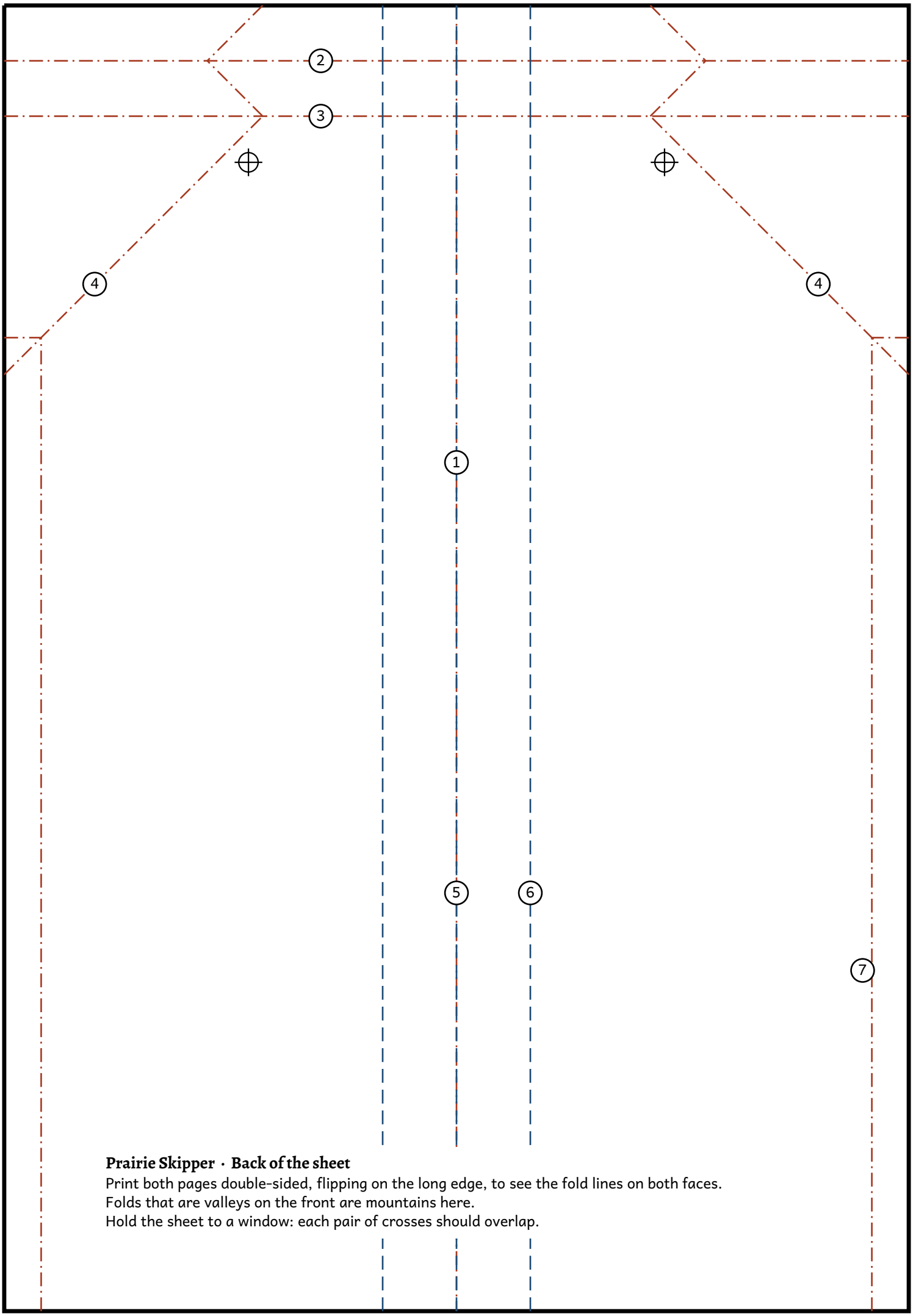

Prairie Skipper · Back of the sheet

Print both pages double-sided, flipping on the long edge, to see the fold lines on both faces.
Folds that are valleys on the front are mountains here.
Hold the sheet to a window: each pair of crosses should overlap.

Prairie Skipper

Folding guide 1 / 3

Use the airplane template. For two printed faces, print the template and its reverse from the separate airplane PDF, flipping on the long edge. Cut along the thick border, then fold. Any print scale works because the lines meet the border you cut.

1 Find the centre

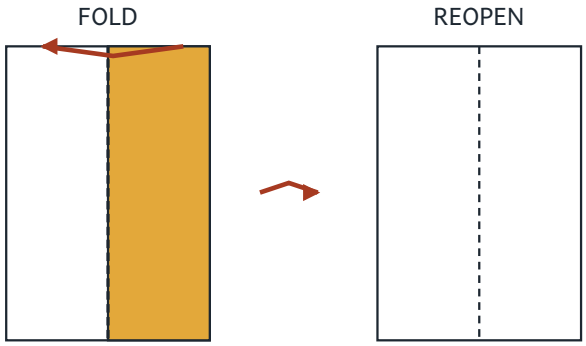

Cut out the sheet along the thick border. Print side up. Put the short edge at the top. Bring the two long edges together, press the middle crease, then open the sheet again.

2 Fold a narrow front cuff

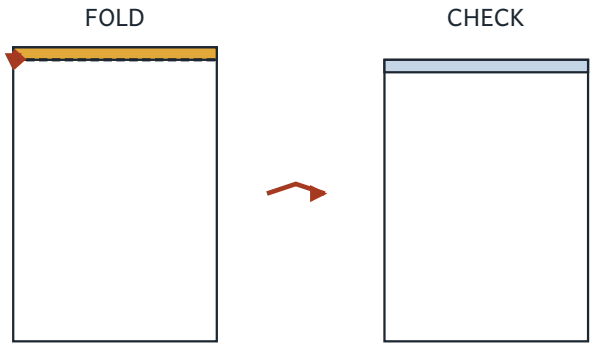

Bring the short top edge down 24 mm to make a 12 mm cuff. Press the whole width.

3 Roll the cuff once more

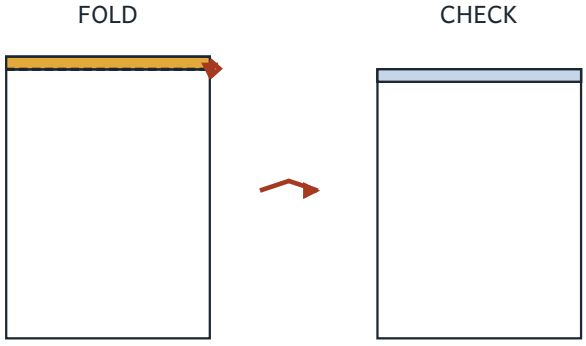

Roll the same strip towards you over its lower edge. The new front sits 24 mm from the original top. Both folds should be parallel.

Prairie Skipper

Folding guide 2 / 3

Use the airplane template. For two printed faces, print the template and its reverse from the separate airplane PDF, flipping on the long edge. Cut along the thick border, then fold. Any print scale works because the lines meet the border you cut.

4 Fold in the shoulders

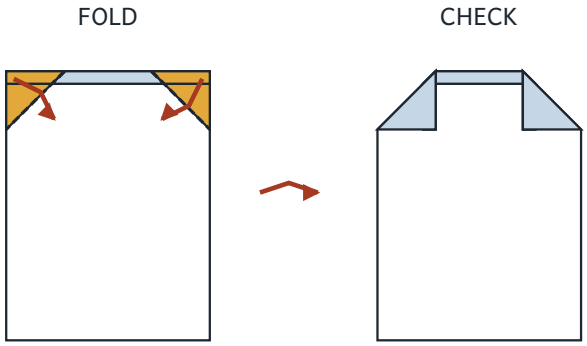

On each side fold the cuff corner diagonally inwards on line 4. The marked diagonal joins two points 56 mm from that corner. A straight strip stays across the middle of the nose.

5 Close the body

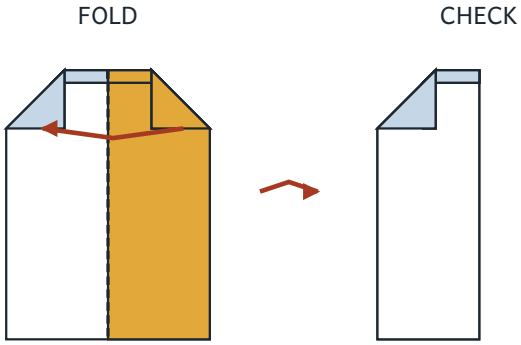

Keep the folded details face up. Fold the right half away from you, behind the left, along the centre line. The folded details will be on the outside.

6 Fold one wing, then match its twin

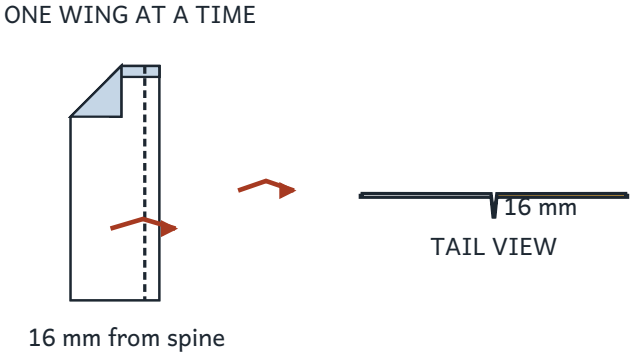

Hold the closed body with the centre edge on your right. Fold only the upper wing outward on the line 16 mm from that edge. Turn the model over and fold the other wing to match. From behind, the wings make a T with the body hanging below.

Prairie Skipper

Folding guide 3 / 3

Use the airplane template. For two printed faces, print the template and its reverse from the separate airplane PDF, flipping on the long edge. Cut along the thick border, then fold. Any print scale works because the lines meet the border you cut.

7 Raise the wing tips

Match the height of both tips



TAIL VIEW

Lift each wingtip about 10 mm above the body fold. Turn up the outer 8 mm of each long side until both tips stand upright. Sight from the tail and match the heights.

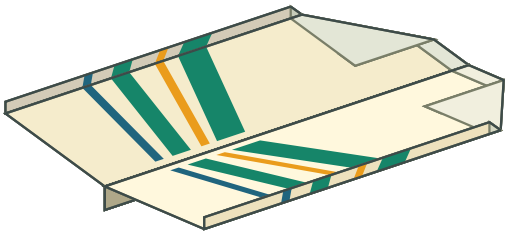

Flight notebook

Hold the body near the front. Launch gently and level into clear space. Open the wings into a very shallow V. Compare five gentle launches with five from a copy with taller turned-up tips. Count how often each lands wings-level.

Launch	Where did it land? What changed?
1	
2	
3	
4	
5	

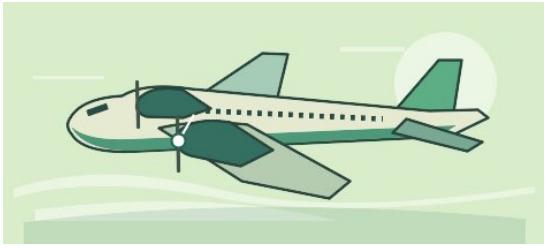

Long wing and twin propellers

Folds 2–4 · Roll the front edge twice and fold in its corners. Pinch the double edge and look for the broad outline and fan-shaped stripes.

Smithsonian • Douglas DC-3

© Open Flight contributors
Geometry · CERN-OHL-W-2.0
Art and lessons · CC BY-SA 4.0
openflight.design/references